OEM□□TWS□□5.0□□TWS□□□□□□□5D□□□□□□□□

□□□ABS +□
□□□□□□□40 mA
□□□□□□□□650mA
□□□□□4-5□□
□□□□□□□1.5□□
□□□□□5.0
□□□□□10-15□
□□□φ14mm * 2
□□□□□□110dB±3dB
□□□25Hz-18kHz
□□□□□**63*63mm**

www.jaskeyworld.com

TWS Earphone

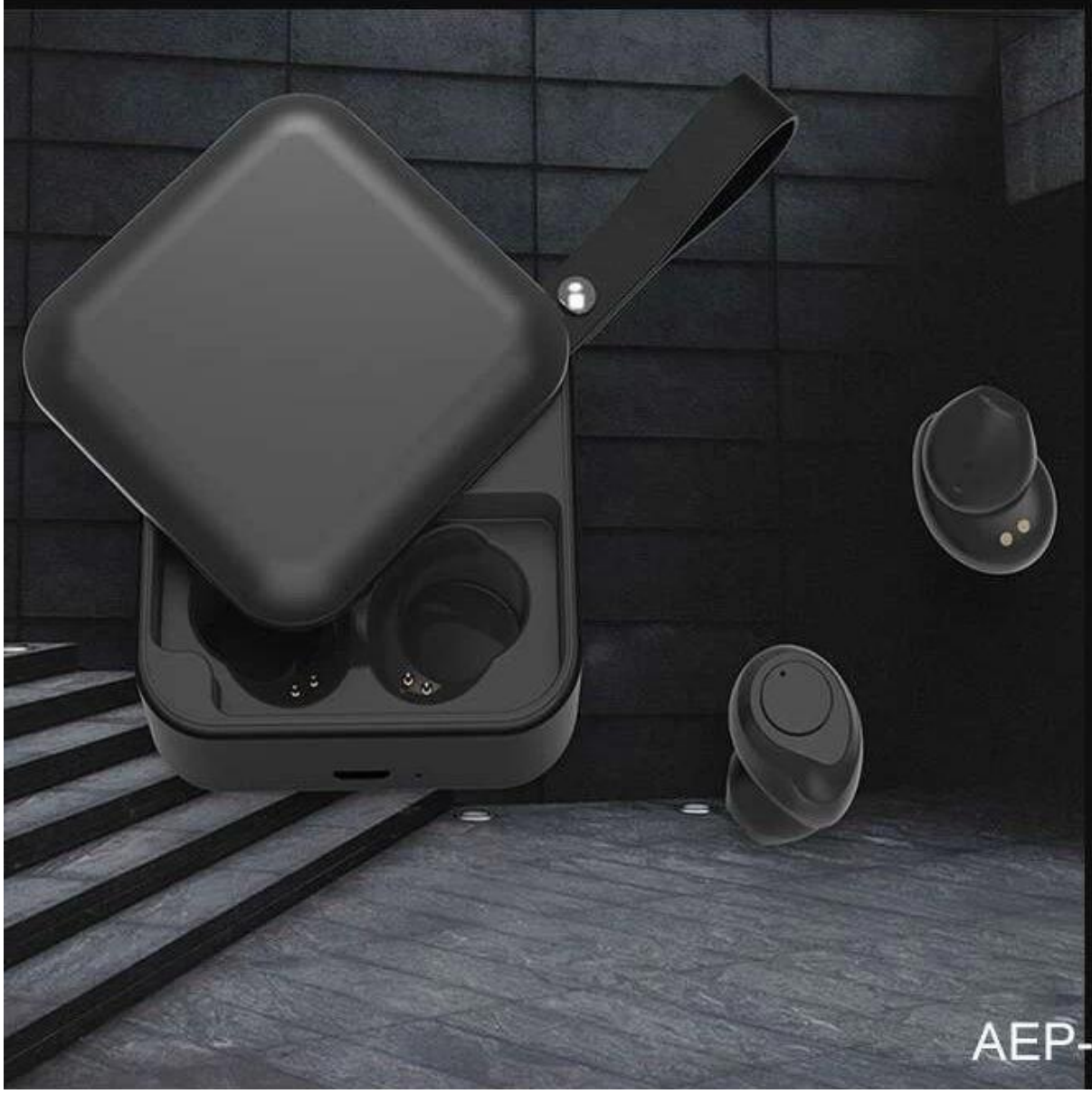

AEP-0197

In-ear design

Wear comfortable and painless

The earplug is designed with a beveled front Angle, which fits the ear canal better. It is comfortable and firm to wear for a long time, and conforms to the ergonomic design

Product introduction

Product size

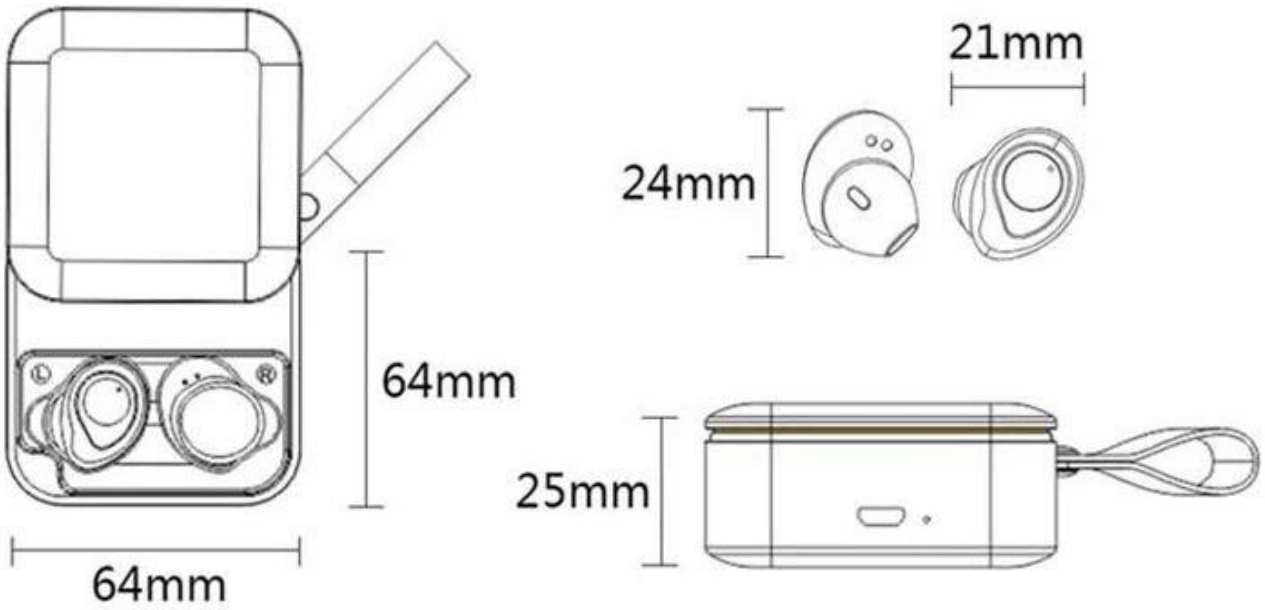

Bluetooth 5.0

High quality bluetooth 5.0 chip, fast, accurate and stable

has its own charging compartment,
which is convenient for storage and
is not afraid of running out of electricity

□□□

- □□□□□□□□□□□□□□□□□□□□□□

Jaskey Limited□□□□□□□□□□□□□□□12□□□□□□□□□□□□□□□□□□□□□□□□□□□□□□

- □□□□□□□□□□□

[illegible]SEDEX 4P[illegible]BSCI[illegible]ISO9001[illegible]ISO9001[illegible]

- - [illegible]

[illegible]

- [illegible]

[illegible]Sawolol[illegible]

- [illegible]

[illegible]T/T[illegible]30[illegible]30[illegible]LC[illegible]PayPal[illegible]Western Union [illegible]Aripay[illegible]

- [illegible]

[illegible]CES[illegible]HKTDC Hong Hong Electronics Fair[illegible]info@jaskeyworld.com[illegible]

[illegible]

- [illegible]**OEM/ODM**[illegible]

[illegible]OEM/ODM/ODM[illegible]R[illegible]D[illegible]3[illegible]

- [illegible]

[illegible]CE[illegible]ROSH[illegible]FCC[illegible]BQB[illegible]

- [illegible]

[illegible]3-7[illegible]

[illegible]25-35[illegible]25-35[illegible]

- [illegible]

[illegible]

- [illegible]

[illegible]

[illegible]info@jaskeyworld.com[illegible]

□□□□□□□□□□□
TWS Tai Nghe HEP-0174
TWS□□AEP-0242
□□□□□TWS□□□□HEP-0168